REVISIONS				
No.	ZONE	ECN	CHANGE	DATE

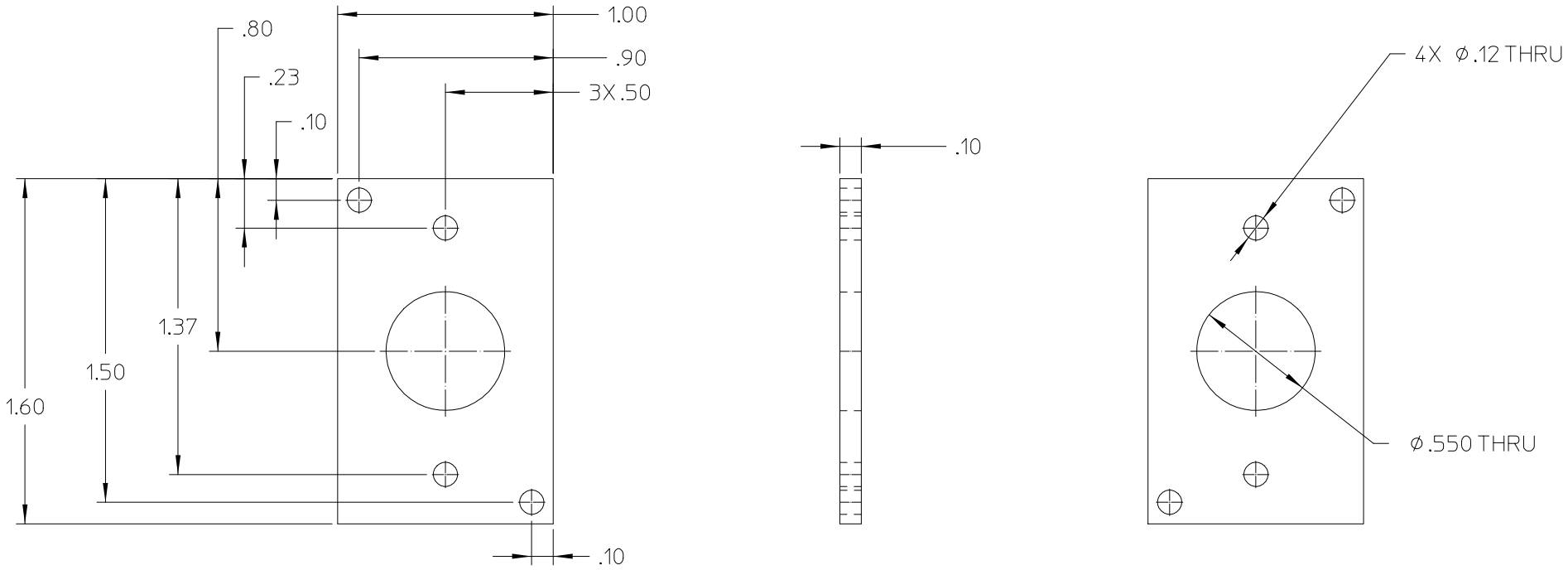

MATERIAL SPECIFICATION		APPROVALS	
MATERIAL Aluminium 6061		ENGR	DATE
FORM	SIZE	ENGR MNGR	DATE
MODEL DATA		**DRAWING DATA**	
MODEL NAME		STATE	DATE
CREATOR cedric	DATE 10/19/2010	VERSION	SHEETS
THIRD ANGLE PROJECTION		DRAFTER	DATE
		LAST UPDATE BY cedric	DATE 10/19/2010

NOTES:

UNLESS OTHERWISE SPECIFIED
DIMENSIONS ARE IN INCHES
TOLERANCES ARE :

DECIMALS		FRACTIONS	
.XXX	±.005		±.015
.XX	±.01	ANGLES	
.X	±.1		±.5

DO NOT SCALE DRAWING

ENGINEER cedric
PHONE NUMBER x2020
EMAIL ADDRESS gagnon@nist.gov

NIST
National Institute of Standards and Technology
U.S. Department of Commerce

CENTER FOR NEUTRON RESEARCH
100 BUREAU DRIVE
GAITHERSBURG, MD. 20899

Bearing Retaining Plate

FOR 1-2 Shear Cell v4

SIZE	DWG No.	REV
B		

SCALE	RELEASE DATE	SHEET
2:1		1 of 1

CALC. WT.	ACT. WT.	DIM. & TOL. PER ANSI Y14.5M-1982

mm_bsize